DAZIC™

ZERO SPEED SWITCHES

Explosion-Proof 2100 EP and 8100 EP Dimensional Diagrams

2100 EP and 8100 EP Series Explosion Proof Models

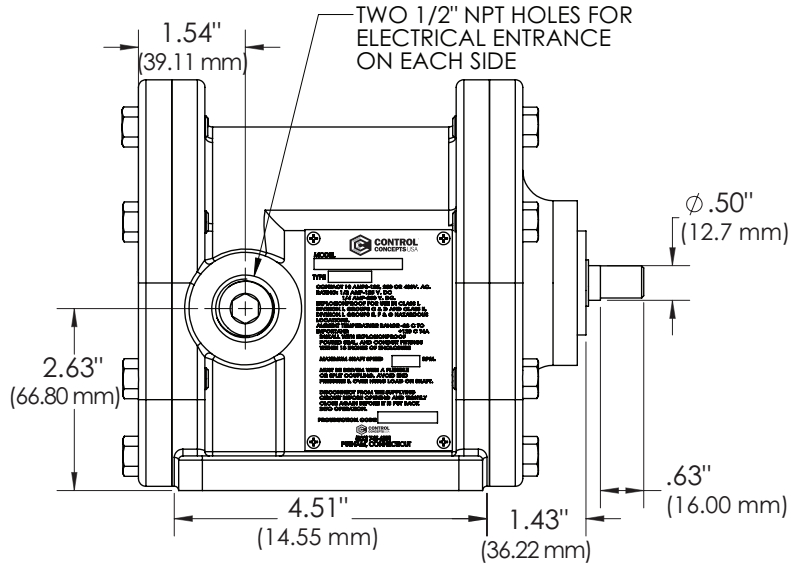

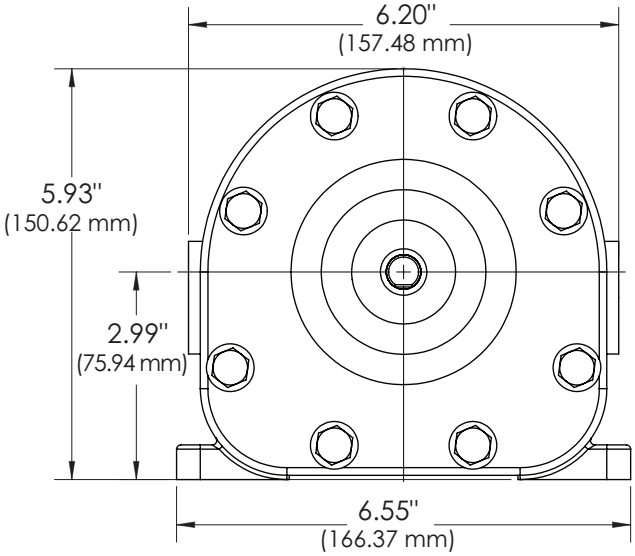

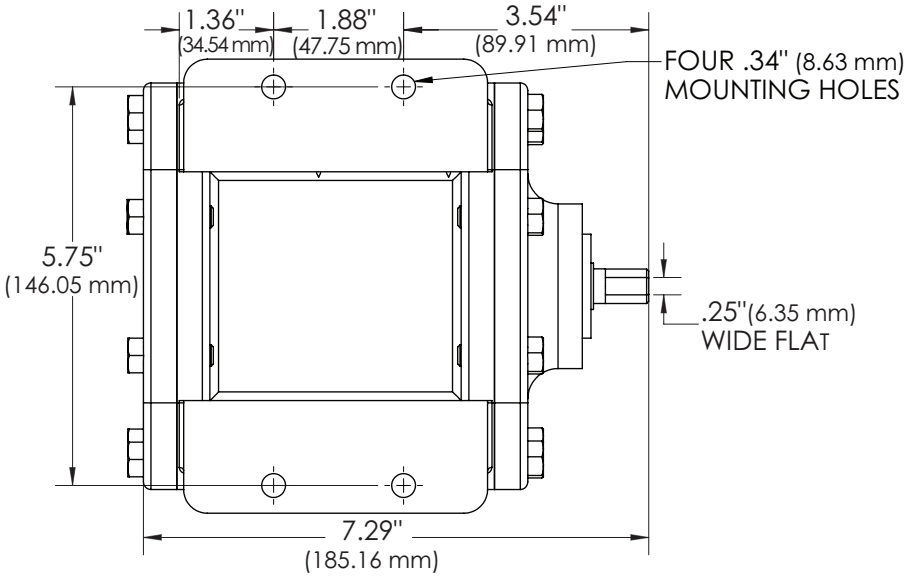

CONTROL CONCEPTS USA

Control Concepts, Inc.
19 S. Main Street,
Brooklyn, CT 06234

E: Sales@ControlConceptsUSA.com
P: 860-928-6551 • F: 860-928-9450
www.SpeedSwitch.com

MADE IN THE USA

©2018 Control Concepts USA. All rights reserved. 201804